AT-master 2.0
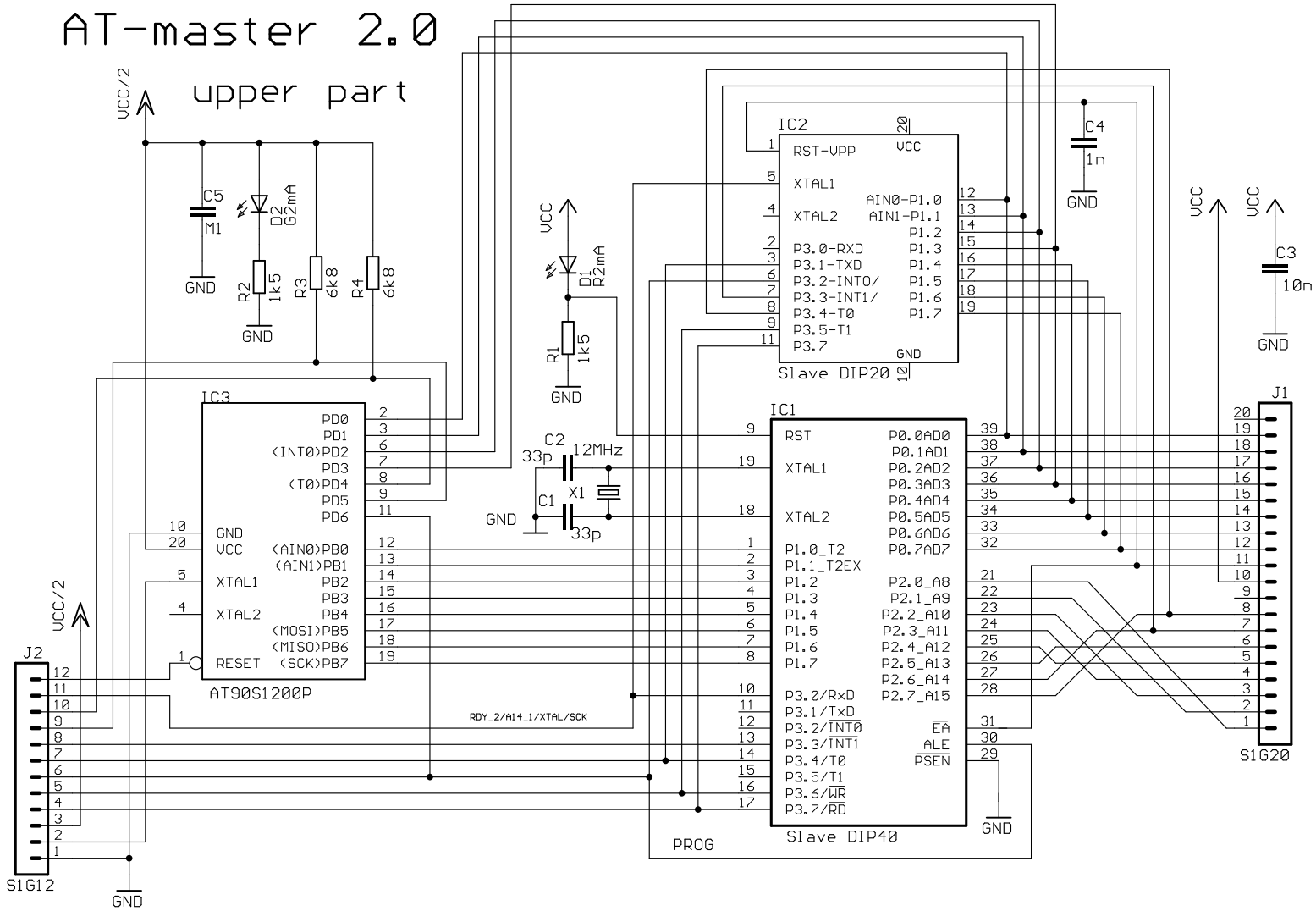
upper part